LASER COMPONENTS®

Precision Mount for Laser Modules with 19 mm Diameter

FP-MPT-19

- For flat surface mounting
- 360° rotation in 2 axes + parallel movement

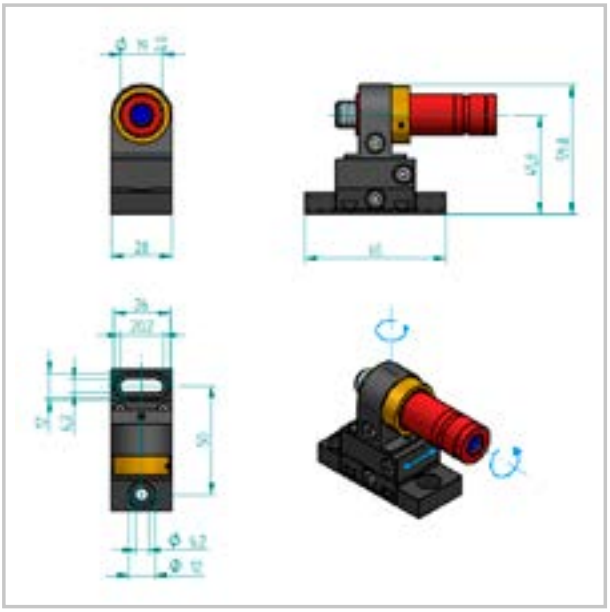

FP-MPS-19

- For mounting on a 16 mm shaft
- 360° rotation in 2 axes + parallel movement (+ rotation on shaft)

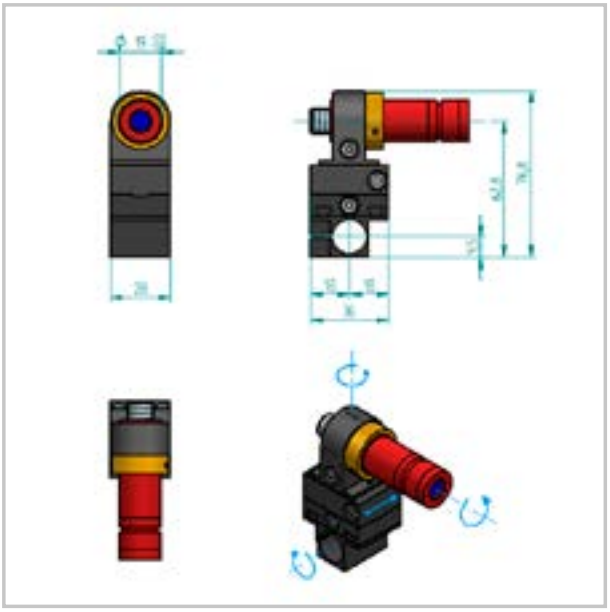

08/18 / V02 / IF / laser-modules/fp-mp-19_mounts

Germany & Other Countries
Laser Components Germany GmbH
Tel: +49 8142 2864 – 0
Fax: +49 8142 2864 – 11
info@lasercomponents.com
www.lasercomponents.com

France
Laser Components S.A.S.
Tel: +33 1 39 59 52 25
Fax: +33 1 39 59 53 50
info@lasercomponents.fr
www.lasercomponents.fr

United Kingdom
Laser Components (UK) Ltd.
Tel: +44 1245 491 499
Fax: +44 1245 491 801
info@lasercomponents.co.uk
www.lasercomponents.co.uk

Nordic Countries
Laser Components Nordic AB
Tel: +46 31 703 71 73
Fax: +46 31 703 71 01
info@lasercomponents.se
www.lasercomponents.se

USA
Laser Components USA, Inc.
Tel: +1 603 821 – 7040
Fax: +1 603 821 – 7041
info@laser-components.com
www.laser-components.com